ABIDE BY WEEE & ROHS

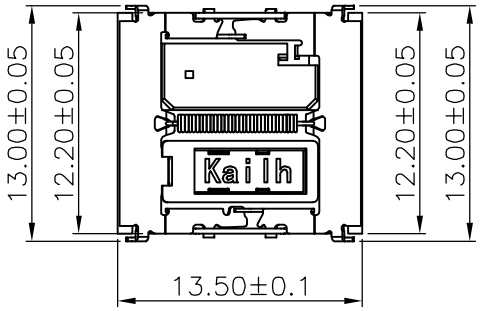

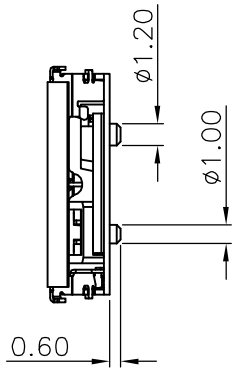

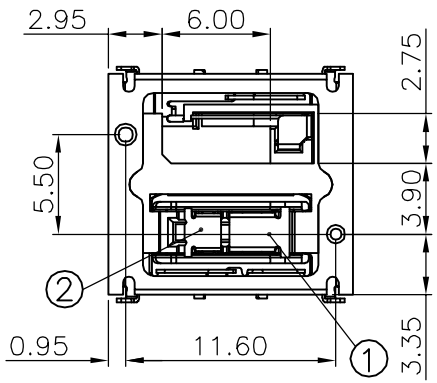

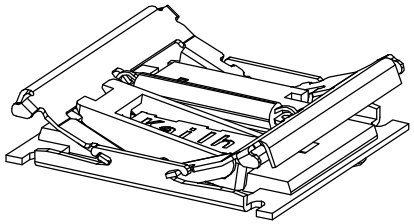

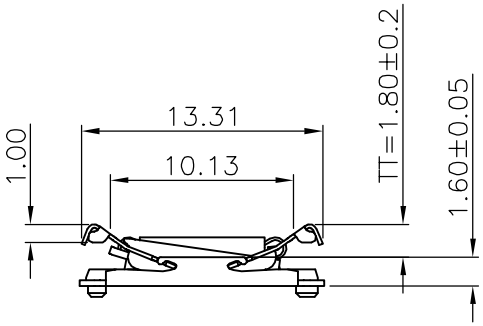

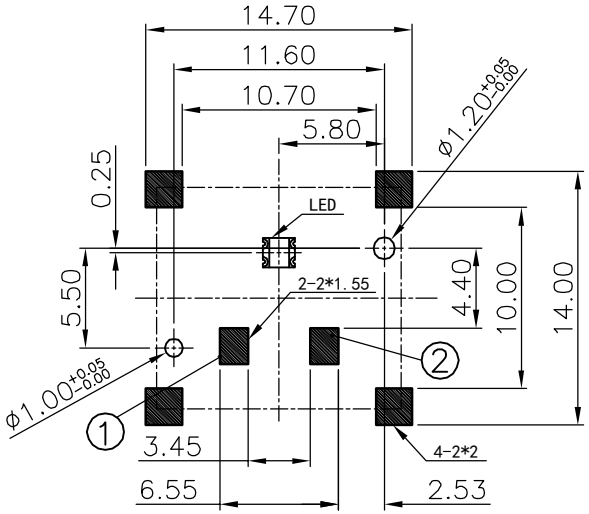

PCB HOLES
LAND PATTERN RECOMMENDATION

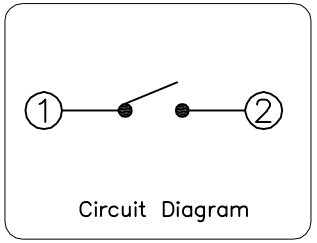

Circuit Diagram

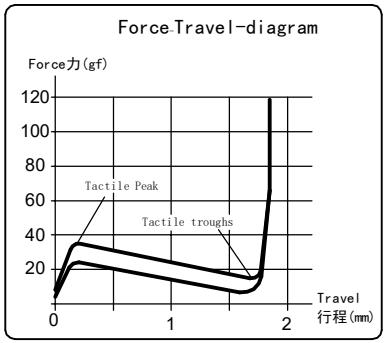

■ Specification :

- 1.Rating :DC12V 10mA
- 2.Contact Resistance :200mΩ Max
- 3.Operation Force :25±10gf
- 4.Tactile force:35±10gf
- 5.Contact travel: 1.0mm±0.3mm
- 6.Total travel:1.80mm±0.2mm
- 7.Operating Life :20,000,000 Cycles

ECN NO.	REV.	DATE.	DESCRIPTION.	CHANGE.	CHECK.	APPRO.
	AO		NEW			

APPROVALS		DATE
DRAWN	PanhaoLv	2024.07.03
CHECKED		
APPROVALS		

TOLERANCES ARE: 30<L ±0.30; 10<L≤30 ±0.20; 5<L≤10 ±0.15; L≤5 ±0.10; ANGLE ±2°

东莞市凯华电子有限公司
KAIHUA ELECTRONICS CO.,LTD

TITLE:	PG1316S 开关（茶轴TT=1.80mm）
PART NO.	CPG1316S01D02-01
UNIT: mm	SCALE: 1:1
DRAWING NO.	
PROJ:	SHEET 1 OF 1

1. General specification 基本事项

1.1 Switch action : Push-on type S. P. S. T
开关种类 : 按键开关

1.2 Switch rating 额定值 : 12 VAC/DC max. 2 VDC min.10mA AC/DC max. 10μA DC min.

1.3 Operation temperature range 使用温度试验范围 : - 20 ～ +70℃

1.4 Storage temperature range 保存温度范围 : - 20 ～ + 80℃

1.5 Suggested storage period 贮存期限 : about 6 months 最多六个月
Require the tin part on the switch terminals should keep good after storage guarantee date
要求贮存期后开关端子部分上锡仍然良好

1.6 Appearance and dimensions 外形及尺寸 : See outside drawing page 见外形尺寸图

1.7 Standard condition 试验、测定状态 Unless otherwise specified, the test and measurements shall be carried out as follows:

Ambient temperature 温 度: 20±2℃
Relative humidity 相对湿度: 45 ～ 85
Air pressure 气 压: 86 ～ 106kPa(860～1060mbar)
However, if doubt arises on the decision based on the measured
Values under the above-mentioned conditions, the following conditions shall be employed:
但是在对判定产生疑义时,按下述状态实施:
Ambient temperature 温 度:20±2℃ Relative humidity 相对湿度: 65±5%
Air pressure 气 压: 86 ～ 106kPa(860～1060mbar)

2. Performance 性能

2.1 Electrical characteristics 电气性能

No.	Item 项目	Test condition 试 验 条 件	Performance 规 格
2.1.1	Contact resistance 接触电阻	Push force: (Operation force) x 2。 测定时的负荷：操作方向动作力基准值的2 倍。 Measurement tool : Contact resistance meter 测定器：微电流接触电阻计(1kHz, 20mV, 5～50mA)	200mΩ MAX 200mΩ 以下
2.1.2	Insulation resistance 绝缘电阻	D. C. 100V(Between terminals) (端子间)	100MΩ min 100MΩ 以上
2.1.3	Withstand voltage 耐电压	A. C100V for 1 min (Between terminals) (端子间)	No. insulation destruction. 无绝缘破坏.
2.1.4	Bouncing 触点抖动	Operation speed : 3～4 times/s 操作速度: 每秒3～4 次 Oscillo scope 示波器 Switch Bouncing Test Circuit 抖动测定回路 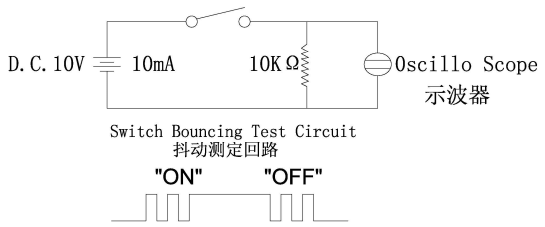	ON:5ms max 以下 OFF:5ms max 以下

2.2 Mechanical Characteristics 机械性能

No.	Item 项目	Test condition 试验条件	Performance 规格
2.2.1	Operation force 动作力 Travel to closure 动作行程（见图表）	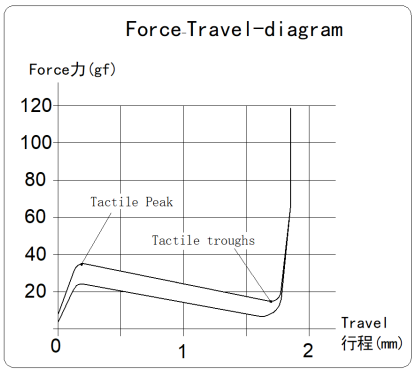	operation force 动作力 25±10gf Tactile force 触感力 35±10gf Full Travel: 1.8mm±0.2 Contactact Travel: 1.0mm±0.3
2.2.2	Push strength 按压强度	10N(1Kgf)for 15 sec 10N(1Kgf) 15 秒 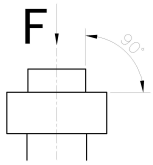	No damage (Electricaland mechanical) 无异常 (电气、机械性能)
2.2.3	Pull strength 推压强度	Break by drawing push plate in the direction of right diagram 抽拔推杆使其破坏的强度.	10N min (1kgf min)
2.2.4	Vibration test 耐振性	1) Amplitude 全振幅: 1.5 mm 2) Sweep rate: 10-55-10HZ for 1 minute 扫描速度: 10-55-10HZ 1 分钟 3) Sweep method: Logarithmic frequency sweep rate 扫描方式: 对数频率扫描速度 4) Vibration direction : X, Y, Z(3 directions) 振动方向: X,Y, Z (3 方向) 5) Time : Each direction 2 hours (Total 6 hours) 时间: 每个方向2 个小时(共6 个小时)	No.2.1 and 2.2.1 to 2.2.2 shall be satisfied 满足2.1 项和2.2.1 至2.2.2 项.
2.2.5	Soldering heat test 耐焊接热	端子焊接部分浸入焊炉，焊炉温度 260±5℃，焊接时间 5±1 秒。(焊接时不可于端子施加外力)。 Terminals shall be dipped in the solder bath at 260±5℃ for 5±1 seconds without additional force for terminals.	No damage (electrical and mechanical) 无异常。 （电气、机械特性）
2.2.6	Solderbility 可悍性	After sprated flux / 涂上助焊剂后 temperature :260± 5℃ / 温度：260± 5℃ soldering time :2±0.5 sec/ 焊接时间:2±0.5 秒	90% or more of surface area of the portion immersed in solder shall be covered by new solder / 90% 或更多的浸焊面能被焊锡覆盖.

2.3 Climatic characteristics 耐候性能

<table>
<tr><th>No.</th><th>Item
项目</th><th>Test condition
试验条件</th><th>Performance 规格</th></tr>
<tr><td>2.3.1</td><td>Cold test
耐寒性</td><td>1) Temperature : - 20±2℃
温度：- 20±2℃
2) Duration of test: 48h
持续时间：48 小时
3) Take off a drop water
去掉水珠
4) Standard conditions after test : 1h
试验后的放置条件：1 小时</td><td>Contact resistance
200mΩ max
No. 2.1.2 to 2.1.4 and
No. 2.2.1 to 2.2.2 shall
Be satisfied
接触电阻 200mΩ以下
满足2.1.2 到2.1.4 项、
2.2.1
到2.2.2 项.</td></tr>
<tr><td>2.3.2</td><td>Heat test
耐热性</td><td>1) Temperature : 70±2℃
温度： 70±2℃
2) Duration of test: 48h
持续时间：48 小时
3) Standard conditions after test : 1h
试验后的放置条件：1 小时</td><td>Contact resistance
200mΩ max
No. 2.1.2 to 2.1.4 and
No. 2.2.1 to 2.2.2 shall
Be satisfied
接触电阻 200mΩ以下
满足2.1.2 到2.1.4 项、2.2.1
到2.2.2 项.</td></tr>
<tr><td>2.3.3</td><td>Temperature
cycle
温度循环</td><td>1) Test cycles :20 cycles
试验周期：20 个周期
2) Standard condition after test :1h
试验后的放置条件：1 小时
<table>
<tr><th></th><th>temperature
温度</th><th>duration of test
持续时间</th></tr>
<tr><td rowspan="4">1 cycle
一次
循环</td><td>20±5℃</td><td>1h</td></tr>
<tr><td>-40±2℃</td><td>1h</td></tr>
<tr><td>20±5℃</td><td>1h</td></tr>
<tr><td>60±5℃</td><td>1h</td></tr>
</table></td><td>Contact resistance
200mΩ max
No. 2.1.2 to 2.1.4 and
No. 2.2.1 to 2.2.2 shall
be satisfied
接触电阻 200mΩ以下
满足2.1.2 到2.1.4 项、
2.2.1
到2.2.2 项.</td></tr>
<tr><td>2.3.4</td><td>Humidity
test
耐湿性</td><td>1) Temperature : 70±2℃
温度：70±2℃
2) relative humidity: 90~95%
相对温度:90~95%
3) Duration of test: 96h
持续时间：96 小时
3) Take off a drop water
去掉水珠
5) Standard conditions after test : 1h
试验后的放置条件：1 小时</td><td>Contact resistance
200mΩ max
No. 2.1.2 to 2.1.4 and
No. 2.2.1 to 2.2.2 shall
Be satisfied
接触电阻 200mΩ以下
满足2.1.2 到2.1.4 项、
2.2.1
到2.2.2 项.</td></tr>
</table>

No.	Item 项目	Test condition试验条件	Performance 规格
2.3.5	Endurance (switching action) 耐久特性（开关寿命）	1) D.C.12V 10mA resistance load D.C 12V 10mA 电阻负荷 2) Operation speed : 1 times / s 动作速度：2-3 次/ 秒 3) Push force : Maximum value of operation force 按力：动作力规格值的上限 4) Operation number:20,000,000cycles 动作次数:20，000，000次	Contact resistance 1Ω max 接触电阻 1Ω以下 Bouncing: 10 ms max 触点抖动：10 毫秒以下 Variation rate of operation force shall be within ±30%to the value before testing 动作力的变化范围在初始值的±30%以内 No.2.1.2 and 2.2.2 shall Be satisfied 满足2.1.2 和2.2.2 项
2.3.6	盐雾实验 Salt Mist Test	试件在下述实验后测量： 1. 温度：35±5°C 2. 盐溶液浓度：5±1%（质量百分比）， 3. 试验时间：4 小时， 4. 试验后，将盐沉积物用水冲掉。 The switch shall be checked after following test: 1.Temperature: 35±5°C 2.Salt solution: 5±1%(Solids by mass) 3.Duration: 4 hours, 4.After immersing, salt deposit shall be removed by running water.	Contact resistance 200mΩ max No. 2.1.2 to 2.1.4 and No. 2.2.1 to 2.2.2 shall Be satisfied 接触电阻 200mΩ以下 满足2.1.2 到2.1.4 项、2.2.1 到2.2.2 项.
2.3.7	Shock 耐冲击性	Measure after test at a condition below 在下列条件下进行测试后的量度 Peak acceleration:80G 冲击加速度:80G Test time-6direction ,each 3 times total 18 times 测试次数-6 个方向，各3 次共计18次。	No.2.1 and 2.2.1 to 2.2.2 shall be satisfied 第2.1 及2.2.1—2.2.2 都应符合要求

3. Precaution 注意事项

3.1 Soldering condition 浸焊条件

ITEM 项目	CONDITION 条 件
Preheat temperature 预热温度	110℃ max (Embilomental temperature of soldering surface of P. W. E) 110℃ 以下(印刷基板焊锡面周围的温度)
Preheat time 预热时间	60 sec, max 60 秒以内
Area of flux 助焊剂的面积	1/2 max of P. W. B. thickness 印刷基板厚度的1/2 以内
Temperature of solder 焊锡温度	260±5℃ 260±5℃
Time of immersion 浸焊时间	Within 5 sec 5 秒以内
Soldering number 浸焊次数	Within 2 times (But should bring down heat of the first soldering) 2 次以内 (但应把第一次焊锡的温度降下来)

1) After switches were soldered, please be careful not to clean switches with solvent
开关浸焊后,注意不要用溶剂清洗.

2) In the case of using soldering iron, soldering conditions shall be 280oC max and 3 sec. max
在使用铬铁的情况下，焊锡温度应在350±10℃ 以下,3 秒以内.

3) Right after switches were soldered; please be careful not to load on the knobs of switches.
浸焊后,注意不要在顶部施加负荷.

3.2 Note(注意点)

1) Please be cautious not to give excessive static load or shock to switches.
注意不要施加超负荷的压力或晃动开关.

2) Please be careful not to pile up P. W. B. after switches were soldered.
开关焊接以后,印刷基板注意不要叠放.

3) Preservation under high temperature and high humidity or corrosive gas should be avoided especially. When you need to preserve for a long period, do not open the carton.
保管时尤其应注意避开高湿高温和有腐蚀性气体的环境.如需长时间保存,请不要打开包装箱.

4) Panasert RH and RH6 shall be used as the standard insert machine (use N type clinch).
使用标准插入机器PANASERT 和RH6（使用N 式钉）

5) CONTROL HAZARDOUS SUBSTANCE: THE PRODUCT SHOULD BE MEET ROHS SPECIFICATION.
产品应满足 ROHS 环境管理物质管制标准